International Components Corporation
Quality Components since 1970

ELECTRO - ACOUSTIC TRANSDUCER

ROHS COMPLIANT

PART NUMBER:
BRT1207P-06-C

Search

SPECIFICATIONS:

RATED VOLTAGE:	5 VDC
OPERATING VOLTAGE:	3 ~ 7
MAX CURRENT:	30 mA
SOUND OUTPUT LEVEL:	83dB @ 10 cm
TERMINAL TYPE:	2 PINS
RESONANT FREQUENCY:	2300 ± 500 Hz
OPERATING TEMPERATURE:	-20 TO +70°C

Search

TONE MODE:	CONTINUOUS
PULSE RATE:	N/A
COIL RESISTANCE:	NOT APPLIC
COIL IMPEDANCE:	WITH BUILT
FRAME DIAMETER:	12.0 mm
FRAME DEPTH:	7.5 mm
MOUNTING DIMENSIONS:	7.6 mm

COMMENTS:

*VALUE APPLYING RATED VOLTAGE (RESONANT FREQUENCY,

**VALUE APPLYING (RESONANT FREQUENCY, SINE WAVE, M
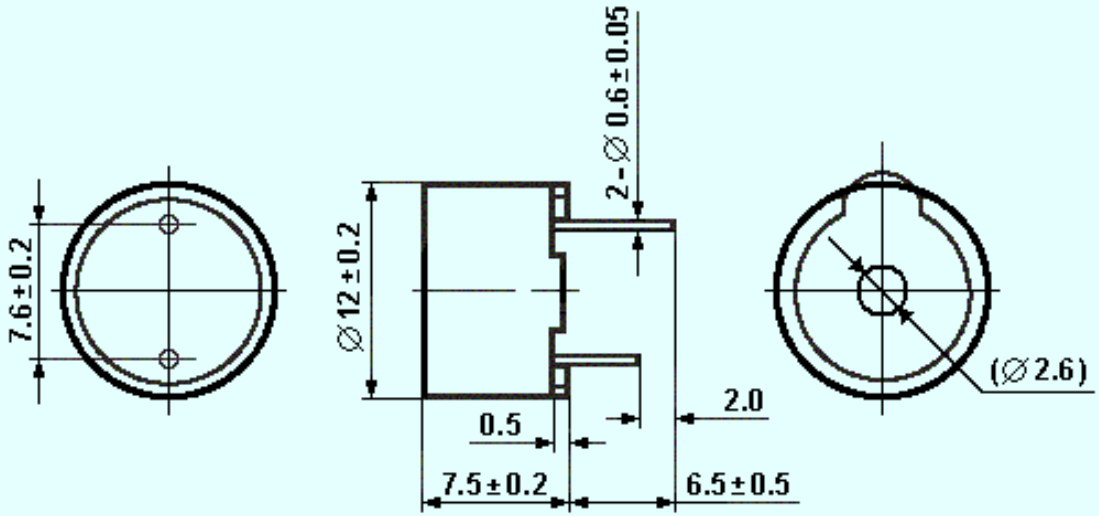
DIMENSIONS: